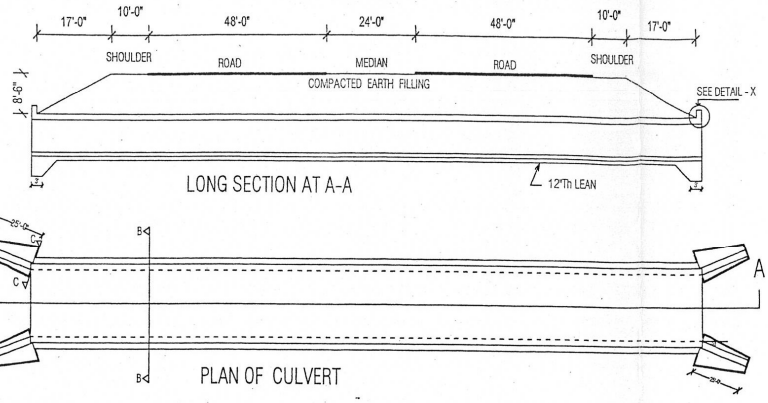

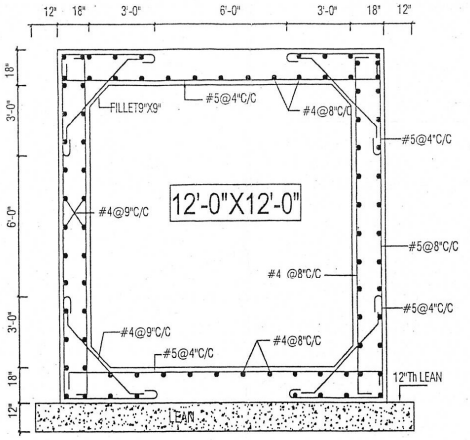

RD 16250
N.S.L Level 1844.74
F.R.L. 1853.2
High Flood Level 9 ft

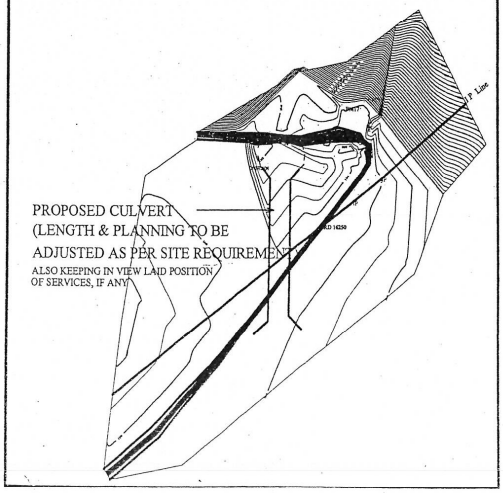

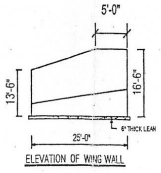

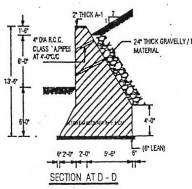

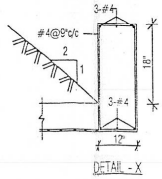

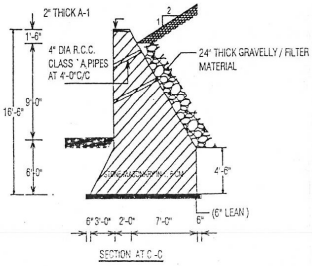

NOTES

1. ENGINEER INCHARGE TO CHECK AND VERIFY ALL DIMENSIONS, LEVELS AND ANGLES BEFORE EXECUTION OF WORK AT SITE.
2. ALL CONCRETE CONSTRUCTION SHOULD CONFORM TO B.S. SPECIFICATIONS.
3. ALL CONCRETE CONSTRUCTION SHOULD BE M/A CLASS A-1 AND HAVE TO MINIMUM CYLINDER CRUSHING STRENGTH OF 3000 PSI AT 28 DAYS UNDER THE SITE CONDITIONS.
4. MILD DEFORMED STEEL REINFORCING BARS HAVING MINIMUM YIELD STRENGTH OF 40000 PSI SHOULD BE USED CONFORMING TO RELEVANT B.S. SPECIFICATIONS.
5. BARS TO BE LAPPED 42 TIMES OF THE LARGER DIAMETER WHERE NECESSARY TO SUIT LENGTH OF BARS AVAILABLE AT SITE.
6. BEARING CAPACITY OF THE SOIL FOR THE DESIGN OF FOUNDATIONS HAS BEEN TAKEN AS 1.25 TON/SQ.FT THIS MUST BE GOT VERIFIED BY THE C.E LAB.C.D.A BEFORE EXECUTION.
7. ALL EARTH TO BE FILLED AND COMPACTED IN LAYERS NOT MORE THAN 9" BEFORE EXECUTION.
8. THE BACK FILLING SHOULD BE DONE WITH PROPERLY GRADED BACK FILL AS PER B.O.I. NO. 16/85 DATED 17-06-85
9. SITE SURVEY PLAN AND DATA PROVIDED BY DG, LAND SURVEY VIDE LETTER NO.CDA/PWL/L-5-1 (17)/D-12/2012/ 504 DATED 03-05-12 WHICH MUST BE VERIFIED AGAIN BEFORE EXECUTION OF WORK.
10. 4"Ø CONCRETE PIPES (GLASS - A WEEP HOLES) SHOULD BE PROVIDED IN THE ENTIRE LENGTH OF THE RETAINING WALLS IN STAGGERED POSITION AT 4'-0" C/C OR AS DIRECTED BY THE ENGINEER INCHARGE.
11. ANY DISCREPANCY NOTED SHOULD BE BROUGHT TO THE NOTICE OF DY. DIRECTOR STRUCTURE-III, BEFORE EXECUTION.
12. FIGURED DIMENSIONS ARE TO BE FOLLOWED.
13. LAID POSITION OF SERVICES, IF ANY, COMMING IN THE ALIGNMENT OF BRIDGE/CULVERT, MUST BE CHECKED BEFORE EXECUTION.

CAPITAL DEVELOPMENT AUTHORITY
DIRECTORATE OF STRUCTURES

ONE CELL BOX CULVERT AT RD.16250, ON KHAYABAN-E-MARGALA FROM G.T.ROAD TO SECTOR D-12 ,ISLAMABAD

STRUCTURAL DETAIL OF CULVERT

DRAWN BY	MUNIR SIDDIQUI
D.A.C.	M.SHAFI SHAHZAD
CHECKED	SHAH FAROOQ KHAN
DATE	14 - 09 - 2012
SCALE	AS SHOWN

STRUCTURAL DESIGN UNIT
DRG. NO. PR- 38 / 1

ASSTT. DIRECTOR STRUCTURES-III (DY. DIRECTOR STRUCTURES-II) | DIRECTOR STRUCTURES(ROADS)

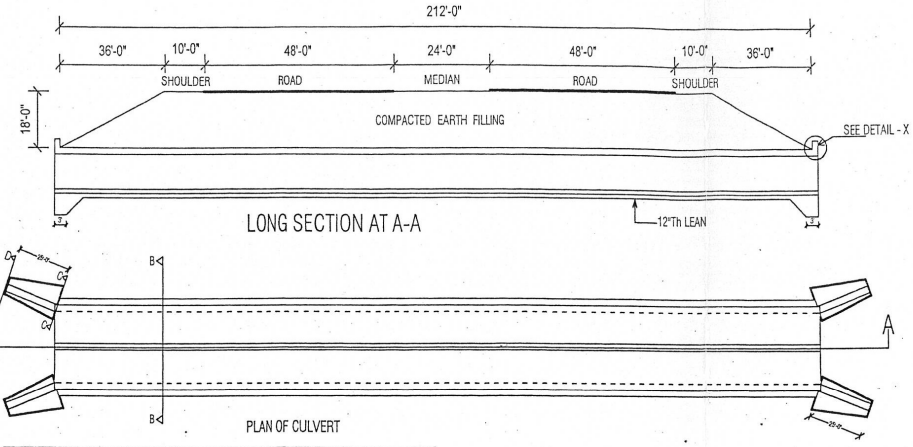

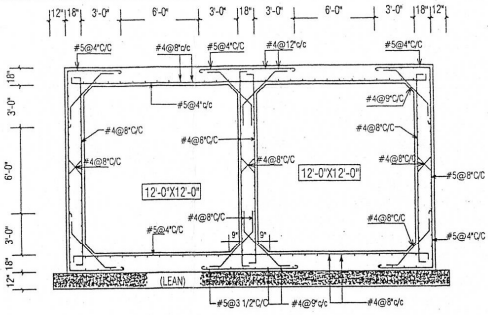

SECTION AT B - B

RD 17350
N.S.L 1847.5
F.R.L.1879.26
High Flood Level 10 ft

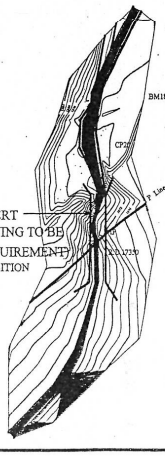

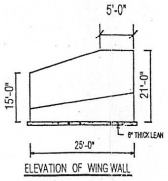

ELEVATION OF WING WALL

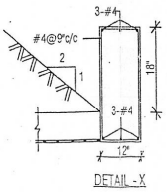

DETAIL - X

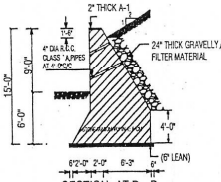

SECTION AT D - D

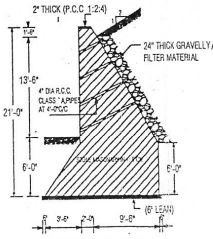

SECTION AT C - C

NOTES

1. ENGINEER INCHARGE TO CHECK AND VERIFY ALL DIMENSIONS, LEVELS AND ANGLES BEFORE EXECUTION OF WORK AT SITE.
2. ALL CONCRETE CONSTRUCTION SHOULD CONFORM TO B.S. SPECIFICATIONS.
3. ALL CONCRETE CONSTRUCTION SHOULD BE NHA CLASS A-1 AND HAVE TO MINIMUM CYLINDER CRUSHING STRENGTH OF 3000 PSI AT 28 DAYS UNDER THE SITE CONDITIONS.
4. MILD DEFORMED STEEL REINFORCING BARS HAVING MINIMUM YIELD STRENGTH OF 40000 PSI SHOULD BE USED CONFORMING TO RELEVANT B.S. SPECIFICATIONS.
5. BARS TO BE LAPPED 42 TIMES OF THE LARGER DIAMETER WHERE NECESSARY TO SUIT LENGTH OF BARS AVAILABLE AT SITE.
6. BEARING CAPACITY OF THE SOIL FOR THE DESIGN OF FOUNDATIONS HAS BEEN TAKEN AS 1.25 TON/SQ.FT THIS MUST BE GOT VERIFIED BY THE C.E.I.A/G.D.A BEFORE EXECUTION.
7. ALL EARTH TO BE FILLED AND COMPACTED IN LAYERS NOT MORE THAN 9" BEFORE EXECUTION.
8. THE BACK FILLING SHOULD BE DONE WITH PROPERLY GRADED BACK FILL AS PER B.G.I. NO. 16/65 DATED 17-06-65
9. SITE SURVEY PLAN AND DATA PROVIDED BY DD, LAND SURVEY VIDE LETTER NO.CDA/PLW/LS-1 (17)(D-12)/2012/ 504 DATED 03-09-12 WHICH MUST BE VERIFIED AGAIN BEFORE EXECUTION OF WORK.
10. 4" Ø CONCRETE PIPE (CLASS - A WEEP HOLES) SHOULD BE PROVIDED IN THE ENTIRE LENGTH OF THE RETAINING WALLS IN STAGGERED POSITION AT 4'-0" C/C OR AS DIRECTED BY THE ENGINEER INCHARGE.
11. ANY DISCREPANCY NOTED SHOULD BE BROUGHT TO THE NOTICE OF DY. DIRECTOR STRUCTURE-III, BEFORE EXECUTION.
12. FIGURED DIMENSIONS ARE TO BE FOLLOWED.
13. LAID POSITION OF SERVICES, IF ANY, COMMING IN THE ALIGNMENT OF BRIDGE/CULVERT, MUST BE CHECKED BEFORE EXECUTION.

CAPITAL DEVELOPMENT AUTHORITY
DIRECTORATE OF STRUCTURES

TWO CELLS BOX CULVERT AT RD.17350, ON KHAYABAN-E-MARGAL FROM G.T.ROAD TO SECTOR D-12 ,ISLAMABAD

STRUCTURAL DETAIL OF CULVERT

DRAWN BY:	MUNIR SUL
CALC:	SHAFI AHMAD
CHECKED	M-UMAR FAROOQ KHAN
DATE:	14 - 09 - 2012
SCALE:	AS SHOWN

STRUCTURAL DESIGN UNIT

DRG. NO. PR- 39 / 1

SHAFI AHMAD
ASSTT. DIRECTOR STRUCTURES-III

M-UMAR FAROOQ KHAN
DY. DIRECTOR STRUCTURES-III

DIRECTOR (STRUCTURES) HEAD

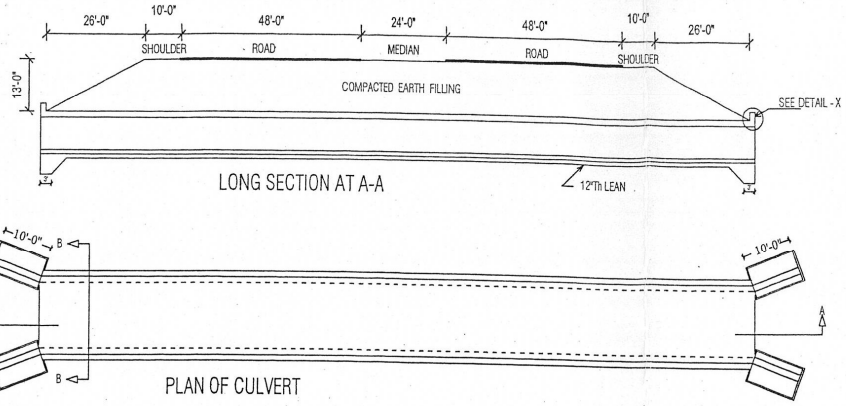

LONG SECTION AT A-A

PLAN OF CULVERT

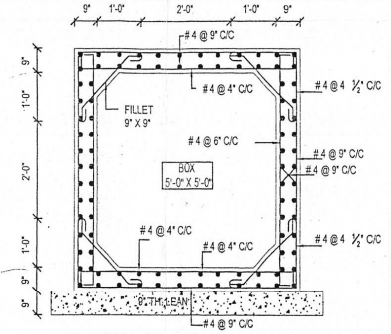

SECTION OF CULVERT AT B-B

RD 18830
N.S.L Level 1951.29
F.R.L. 1973.71
High Flood Level 8' ft

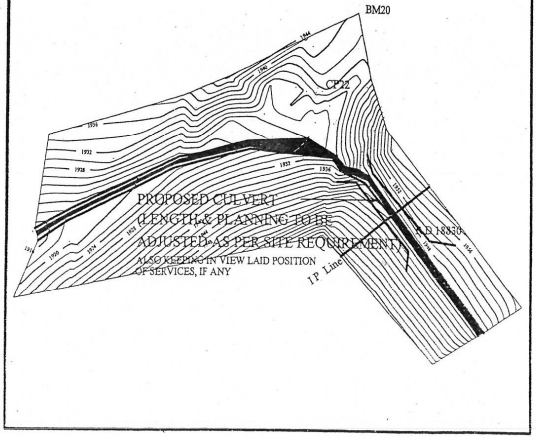

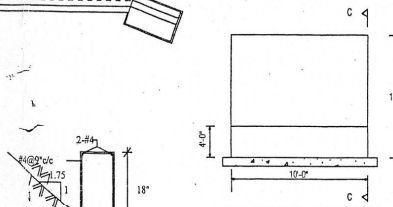

TYPICAL ELEVATION OF WING WALL

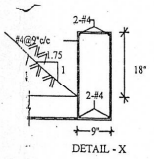

DETAIL - X

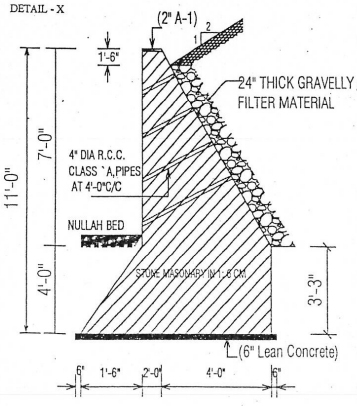

SECTION AT C - C

NOTES

1. ENGINEER INCHARGE TO CHECK AND VERIFY ALL DIMENSIONS, LEVELS AND ANGLES BEFORE EXECUTION OF WORK AT SITE.
2. ALL CONCRETE CONSTRUCTION SHOULD CONFORM TO B.S. SPECIFICATIONS.
3. ALL CONCRETE CONSTRUCTION SHOULD BE M-IN A CLASS A-1 AND HAVE TO MINIMUM CYLINDER CRUSHING STRENGTH OF 3000 PSI AT 28 DAYS UNDER THE SITE CONDITIONS.
4. MILD DEFORMED STEEL REINFORCING BARS HAVING MINIMUM YIELD STRENGTH OF 40000 PSI SHOULD BE USED CONFORMING TO RELEVANT B.S. SPECIFICATIONS.
5. BARS TO BE LAPPED 42 TIMES OF THE LARGER DIAMETER WHERE NECESSARY TO SUIT LENGTH OF BARS AVAILABLE AT SITE.
6. BEARING CAPACITY OF THE SOIL FOR THE DESIGN OF FOUNDATIONS HAS BEEN TAKEN AS 1.25 TON/SQ.FT THIS MUST BE GOT VERIFIED BY THE C.E LAHD.D.A BEFORE EXECUTION.
7. ALL EARTH TO BE FILLED AND COMPACTED IN LAYERS NOT MORE THAN 9" BEFORE EXECUTION.
8. THE BACK FILLING SHOULD BE DONE WITH PROPERLY GRADED BACK FILL AS PER B.D.L NO. 18/85 DATED 17-06-85
9. SITE SURVEY PLAN AND DATA PROVIDED BY CD. LAND SURVEY VIDE LETTER NO CDA/PLW/L.S-1 (17)D-13/2012 564 DATED 03-05-12 WHICH MUST BE VERIFIED AGAIN BEFORE EXECUTION OF WORK.
10. 4" Ø CONCRETE PIPES (CLASS - A WEEP HOLES) SHOULD BE PROVIDED IN THE ENTIRE LENGTH OF THE RETAINING WALLS IN STAGGERED POSITION AT 4'-0" C/C OR AS DIRECTED BY THE ENGINEER INCHARGE.
11. ANY DISCREPANCY NOTED SHOULD BE BROUGHT TO THE NOTICE OF DY. DIRECTOR STRUCTURE-III, BEFORE EXECUTION.
12. FIGURED DIMENSIONS ARE TO BE FOLLOWED.
13. LAID POSITION OF SERVICES, IF ANY, COMMING IN THE ALIGNMENT OF BRIDGE/CULVERT, MUST BE CHECKED BEFORE EXECUTION.

CAPITAL DEVELOPMENT AUTHORITY
DIRECTORATE OF STRUCTURES

ONE CELL BOX CULVERT AT RD.,18830, ON KHAYABAN-E-MARGALA FROM G.T.ROAD TO SECTOR D-12 ,ISLAMABAD

STRUCTURAL DETAIL OF CULVERT

DESIGN BY	I. MUNEER
DRAWN	SHAFI AHMAD
CHECKED	M.ZAMAR FAROOQ KHAN
DATE	14 - 05 - 2012
SCALE	AS SHOWN

STRUCTURAL DESIGN UNIT

DRG. NO. PR - 40/1

SHAFI AHMAD
ASSTT. DIRECTOR STRUCTURES-II

M.ZAMAR FAROOQ KHAN
DY. DIRECTOR STRUCTURES-III

DIRECTOR STRUCTURES (HQRS)

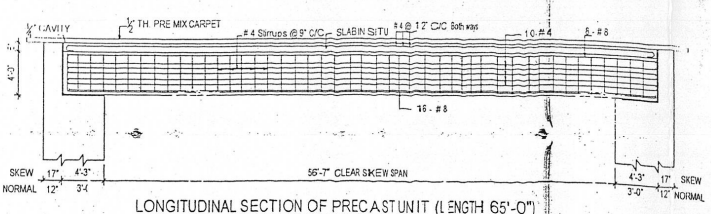

LONGITUDINAL SECTION OF PRECAST UNIT (LENGTH 65'-0")

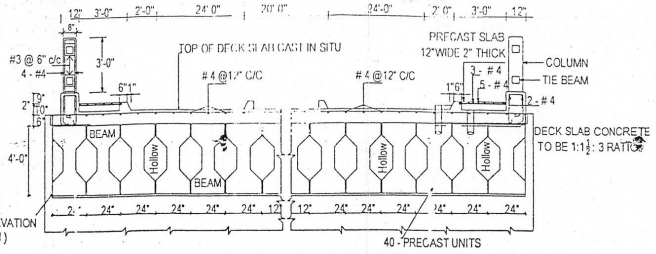

TRANSVERSE SECTION OF DECK , PEDESTRIAN WAY & RAILING

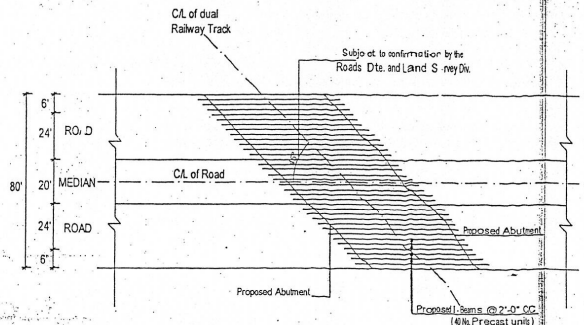

DECK LEVEL PLAN OF BRIDGE

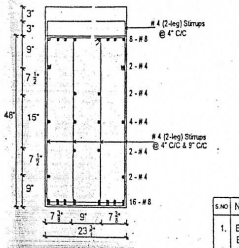

CROSS SECTION OF PRECAST UNIT AT ENDS

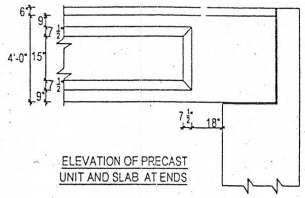

ELEVATION OF PRECAST UNIT AND SLAB AT ENDS

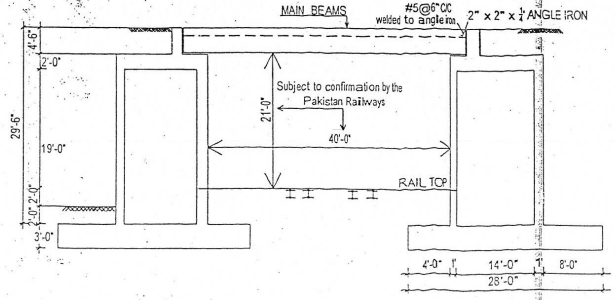

ELEVATION OF BRIDGE

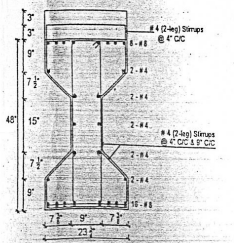

TYPICAL SECTION OF PRECAST UNIT

S.NO	NOTES
1.	ENGINEER INCHARGE TO CHECK AND VERIFY ALL DIMENSIONS, LEVELS, ANGLES AND POSITION OF BRIDGE BEFORE EXECUTION OF WORK.
2.	DECK CONCRETE SHOULD BE NHA CLASS A-3 AND TO HAVE MINIMUM CYLINDER CRUSHING STRENGTH OF 4000 P. S. I AT 28 DAYS UNDER THE SITE CONDITIONS. ALL OTHER CONCRETE SHOULD BE NHA CLASS A-1 AND TO HAVE MINIMUM CYLINDER STRENGTH OF 3000 P. S. I AT 28 DAYS.
3.	ALL CONCRETE CONSTRUCTION SHOULD CONFORM TO B. S SPECIFICATIONS.
4.	USE DEFORMED STEEL BARS WITH MINIMUM YIELD STRENGTH OF 60,000 P. S. I EXCEPT, STIRRUPS STEEL TO HAVE MINIMUM YIELD STRENGTH OF 40,000 P. S. I.
5.	COLD DRAWN TWISTED STEEL (TOR STEEL) SHALL NOT BE USED.
6.	IN SLABS AND BEAMS BOTTOM BARS WILL NOT BE CURTAILED AT SUPPORTS.
7.	BARS TO BE LAPPED 45 TIMES DIA OF LARGER DIA BARS WHERE NECESSARY TO SUIT LENGTH OF BARS AVAILABLE AT SITE.
8.	DESIGN HAS BEEN BASED ON 1.50 TON/SFT BEARING CAPACITY OF FOUNDATION SOIL AS PER C.E. LAB. SOIL REPORT NO. T.R.NO.SM/001/13-14 PROVIDED VIDE LETTER NO. CDA/OD(RD-II)/AVE/2013/607 DATED 28-8-13. THE SAME MUST BE GOT VERIFIED BEFORE FINALIZATION OF DESIGN AND EXECUTION OF WORK.
9.	ALL EARTH TO BE FILLED AND COMPACTED IN LAYERS NOT MORE THAN 9" THICK AT A TIME.
10.	BACK FILLING SHOULD BE DONE WITH PROPERLY GRADED MATERIAL AS PER B.O.I NO.18/65 DATED 17-6-1965.
11.	2" DIA P. V. C PIPE AND 4" DIA R. C. C PIPES (CLASS-A) TO BE PROVIDED IN ABUTMENTS AND WING WALLS RESPECTIVELY AT 6'-0" C/C STAGGERED OR AS DIRECTED BY ENGINEER INCHARGE.
12.	THE DESIGN HAS BEEN BASED ON N.S.L.s INDICATED ON ROAD PROFILE WHICH MUST BE CONFIRMED AGAIN BEFORE EXECUTION OF WORK.
13.	ANY DISCREPANCY NOTICED SHOULD BE BROUGHT TO THE NOTICE OF DY. DIRECTOR STRUCTURES (ROADS) BEFORE EXECUTION.
14.	FIGURED DIMENSIONS ARE TO BE FOLLOWED.

IMPORTANT NOTE

THE DESIGN HAS BEEN BASED ON ASSUMED CLEAR HORIZONTAL AND VERTICAL OPENINGS OF THE RAILWAY BRIDGE, AND SKEW ANGLE OF THE RAILWAY TRACT WITH KHYABAN-E-MARGALLA. THE FOLLOWING DOCUMENTS MUST THEREFORE BE PROVIDED TO THE DTE. OF STRUCTURES (ROADS), CDA FOR FINALIZATION OF DESIGN:-

1. A CROSS-SECTION SHOWING THE SAID CLEARANCES AT THE SUBJECT SITE DULY APPROVED BY PAKISTAN RAILWAYS.
2. CONTOUR PLAN OF THE SUBJECT SITE SHOWING THE SKEW ANGLE CONFIRMED BY THE ROADS DTE., CDA AND LAND SURVEY DIVISION, CDA.

CAPITAL DEVELOPMENT AUTHORITY
DIRECTORATE OF STRUCTURES

BRIDGE OVER RAILWAY TRACK AT R.D. 9280
ON KHAYABAN-E- MARGALLA , ISLAMABAD.

STRUCTURAL DETAILS OF PERCAST BEAMS, DECK SLAB, RAILING etc.

DATE	April - 2014	STRUCTURAL DESIGN UNIT	
DRAWN BY			
CAL			
CHECKED BY			
SCALE	AS SHOWN	DRG NO:	PR - 41/1

ASSTT. DIRECTOR — DY. DIRECTOR STRUCTURES (R) — DIRECTOR STRUCTURES (ROADS)

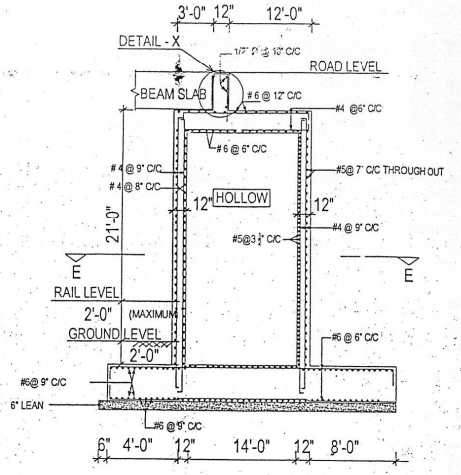

SECTION AT A-A

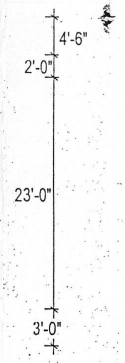

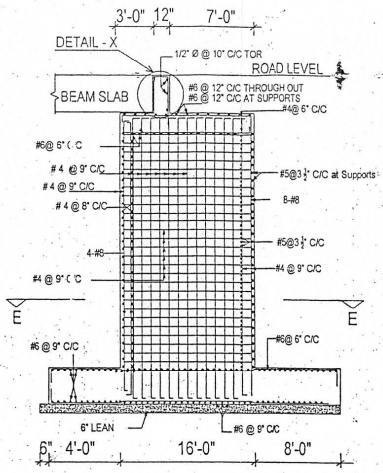

SECTION AT B-B

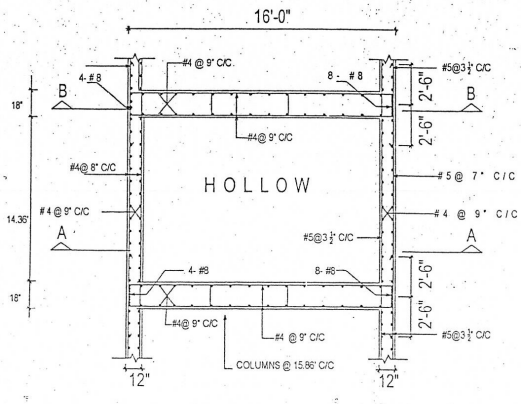

SECTION AT E-E

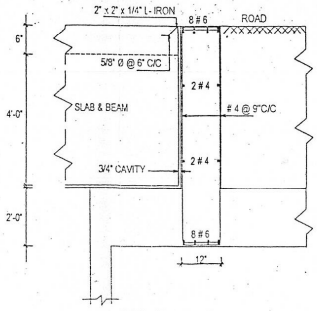

DETAIL AT - X

CAPITAL DEVELOPMENT AUTHORITY DIRECTORATE OF STRUCTURES	
BRIDGE OVER RAILWAY TRACK AT R.D. 9280 ON KHAYABAN-E- MARGALLA , ISLAMABAD.	
SECTIONS OF FOUNDATION	
DATE: April - 2014 DRAWN BY: CAL: CHECKED BY: SCALE: AS SHOWN	STRUCTURAL DESIGN UNIT DRG NO: PR - 41/2
ASSTT. DIRECTOR 12-4-14	DY. DIRECTOR STRUCTURE -III
	DIRECTOR STRUCTURES (HQ)

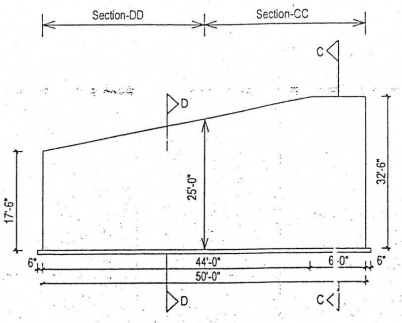

Elevation of Wing Wall No 3 & 4 (??)

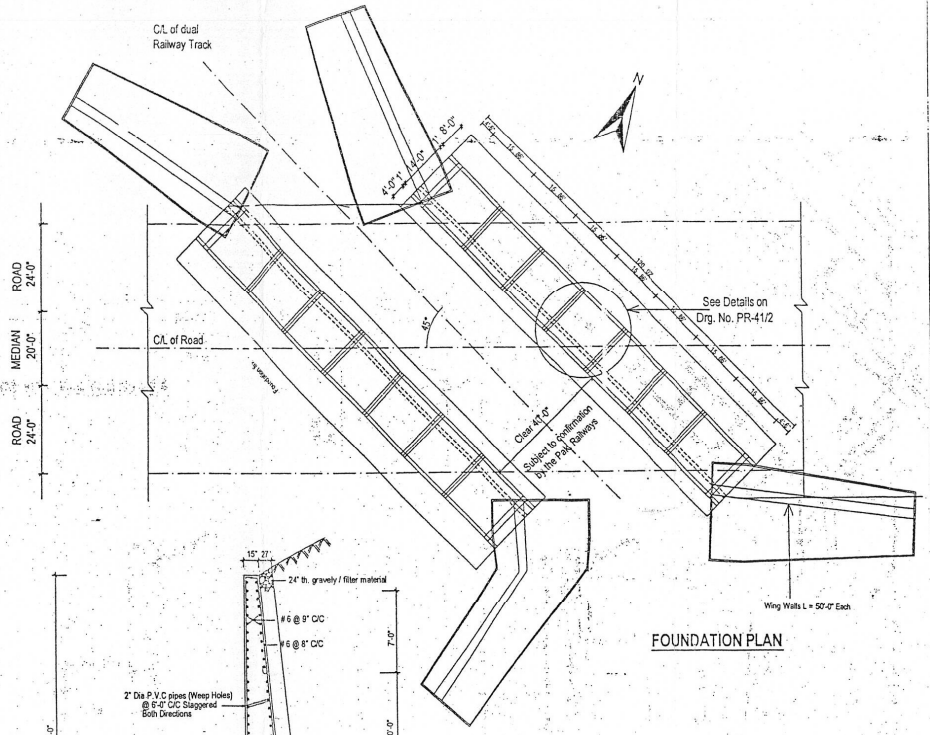

FOUNDATION PLAN

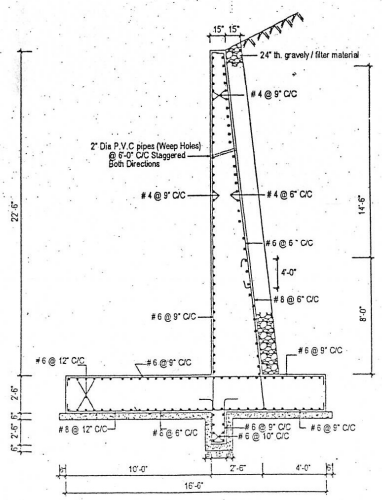

Wing Wall Section at - DD

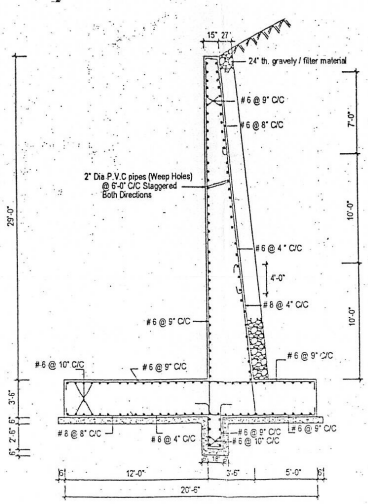

Wing Wall Section at - CC

CAPITAL DEVELOPMENT AUTHORITY DIRECTORATE OF STRUCTURES			
BRIDGE OVER RAILWAY TRACK AT R.D. 9280 ON KHAYABAN-E- MARGALLA, ISLAMABAD.			
FOUNDATION PLAN AND STRUCTURAL DETAILS OF WING WALLS			
DATE	April - 2014	STRUCTURAL DESIGN UNIT	
DRAWN BY			
CAL			
CHECKED BY			
SCALE	AS SHOWN	DRG NO:	PR - 41/3
16-4-14 ADDITT. DIRECTOR		DY DIRECTOR STRUCTURE -III	DIRECTOR STRUCTURES/HOD